◆ DESCRIPTION

Flow
⬏
Working Positions
✳

Thermodynamic DT42S disc steam traps are compact and lightweight-easy to install traps, excellent for high pressure systems, including steam tracing applications.
These traps have only one moving part and offer a wide operating range, without adjustment.
Connections are female screwed or flanged.



◆ MAIN FEATURE

Intermittent discharge.
Operates on superheated steam.
The seat and disc can be easily replaced in field without removing the trap from the line.
Unaffected by water hammer and vibrations
Built-in easy-to-clean strainer.

OPTIONS:	Insulation cap Blow-off valve
USE:	Saturated and superheated steam.
AVAILABLE MODELS:	DT 42S
SIZES:	DN ½" to DN 1" – DN15 to DN25
CONNECTIONS:	Female screwed ISO7/1 Rp (BS21) Flanged EN1092-1 PN40-PN63 or ANSI
INSTALLATION:	Horizontal installation remommended. Can be installed in any position.
APPLICATION LIMITS:	Min-working pressure – 0,25 bar Max.working back pressure – 80%



BODY LIMITING CONDITIONS

FLANGED PN63 *	FLANGED PN40 / ANSI 300 *	FLANGED ANSI 150 **	RELATED TEMP.
ALLOW. PRES.	ALLOW. PRES.	ALLOW. PRES.	
63 bar	40 bar	19,3 bar	50 °C
55,5 bar	35 bar	15,8 bar	150 °C
48 bar	30,4 bar	12,1 bar	250 °C
43,5 bar	27,6 bar	10,2 bar	300 °C

PMO - Max. operating pressure 42 bar
TMO - Max. operating temperature 300 °C
* Rating according to EN1092-1:2007 ** Rating according to EN1759-1:2004
Note: Body limiting conditions PN63 or below, depending on the type of connection adopted. Rating PN63 for thread, SW and BW.

FLOW RATE CAPACITY IN Kgs/h

MODEL	SIZE DN	DIFFERENTIAL PRESSURE (bar)												
		0,5	1	3	6	9	12	15	18	21	24	30	35	42
DT 42S	1/2"-15	200	210	350	480	580	660	740	800	850	910	1020	1100	1200
DT 42S	3/4"-20	310	320	520	720	860	980	1050	1175	1220	1350	1500	1600	1750
DT 42S	1"-25	470	485	800	1100	1310	1500	1750	1800	1950	2100	2300	2480	2720

Specification is subject to change without prior notice

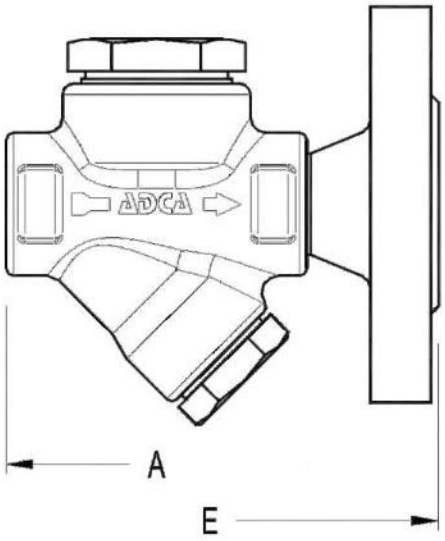

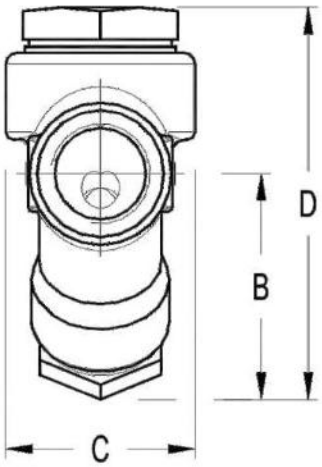

DIMENSIONS (mm)													
Screwed and SW *						EN PN16/PN40		EN PN63		ANSI 150		ANSI 300	
SIZE DN	A	B	C	D	WGT. Kgs	E	WGT. Kgs	E	WGT. Kgs	E	WGT. Kgs	E	WGT. Kgs
15-1/2"	80	56	46	96	1	150	2,5	150	3,4	150	2	150	2,8
20-3/4"	80	56	52	105	2	150	3,3	150	4,3	150	2,6	150	3,9
25-1"	98	56	62	115	1,8	160	4,4	160	7,2	160	4	160	5,4

* BW (butt weld) on request.

STEAM EQUIPMENT

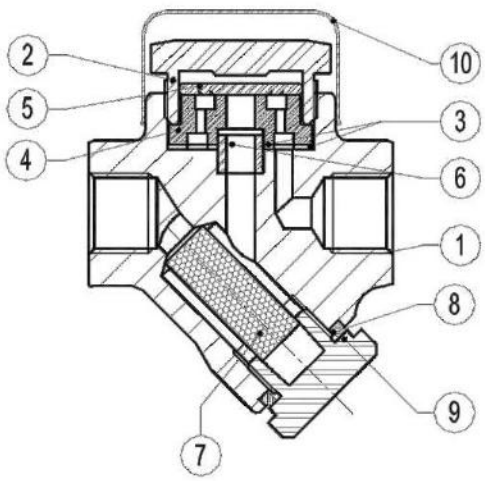

MATERIALS		
POS.Nr.	DESIGNATION	MATERIAL
1	Body	P250GH / 1.0460
2	Cover	AISI 304 / 1.4301
3	*Gasket	Graphite
4	*Seat	Hardened St.Steel
5	*Valve disc	Hardened St.Steel
6	*Tube	AISI 304 / 1.4301
7	*Strainer screen	AISI 304 / 1.4301
8	*Gasket	StainlessSt./Graphite
9	Plug	A105 / 1.0432
10	Insulating Cap	AISI 304 / 1.4301

*Available spare parts.