MODEL : 113BM [Low Pressure Drop Check Valve]

Connection : Wafer PN 10, 16 ,40, ANSI 150, 300

•VTV-VALVE LOW PRESSURE DROP CHECK VALVE



The type 113BM check valve is unidirectional. Therefore the assembly should be always according to the Direction of flow of the fluid so the counter pressure is on the disk. The assembly of the valve can be made either horizontally or vertically, it dependson the works.

It is necessary to supervise and keep the correct distancebetween flanges, as well as a good aligment and parallelism between the valve and the pipe.

For assembly of this valve a watertightness joint between flanges should be placed.

•ADVANTAGES

- High Capacity
- Short Face to Face
- Suitable for all the standard flanges
- for high performance and pressure
- Doesn't need any maintenance
- SS316 Material for corrosion resistant
- Metal Seated
- Excellent tightness
- Fast acting & Quick closing reaction
- Installation can be Horizontal & Vertical
- Low pressure drop and opening pressure

•MATERIALS

- AISI 316 (CF8M) : -Special alloys under request
  -Spindle in AISI 316

No.	Description	Material
1	Body	CF8M
2	Disc	CF8M
3	Free Stem	AISI316L
4	Welded Stem	AISI316L
5	Rod	AISI316L
6	Spring	AISI302

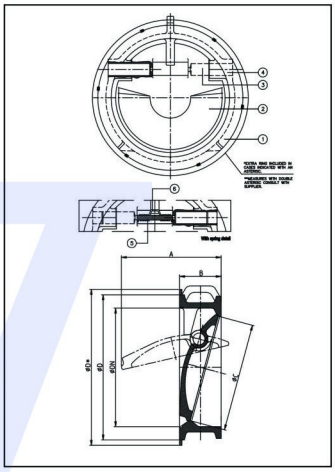

Valves manufactured following European Pressure Equipment Directive PED2014/68/EU

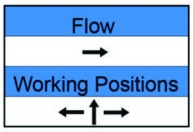

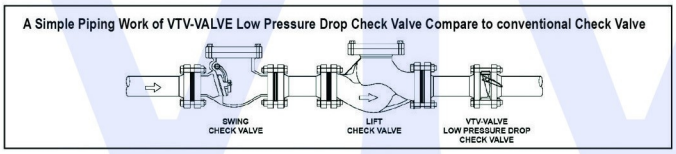

•DIMENSIONS (mm)

DN	INCHES	A	B	ØC	ØD						Weight
					PN10	PN16	PN25	PN40	ANSI150	ANSI300	Kg
40	1-1/2"	46	33	34		93	93	93	84.0		1.2
50	2"	57	43	44	107	107	107	107	102.5		1.5
65	2-1/12"	67	46	58	127	127	127	127	121.5	107	2
80	3"	87	64	72	142	142	142	142	134.5	127	3
100	4"	100	64	90	162	162	162	162	172.5**	142	5
125	5"	117	70	112	194	194	194	194	194	178*	7
*152	6"	135	76	135		218					8
*203	8"	178	89	180		273					17
250	10"	220	114	225	329	329	340	352*	337.5	306*	27
300	12"	262	114	270	378	384	401*	418*	407.5*	325*	35
350	14"	303	127	315	438	444	458*	475*	448.5*	418*	55
400	16"	355	140	365	490	496	515*	547*	512*	482*	65
450	18"	390	152	420	539	556*	565*	586*	547*		95
500	20"	440	152	460	594	618*	625*	629*	604.5*		120
600	24"	530	178	555	696	732*	732*	747*	715.5*		180
700	28"	610	229	650	811	805	834*	852*	828*		250

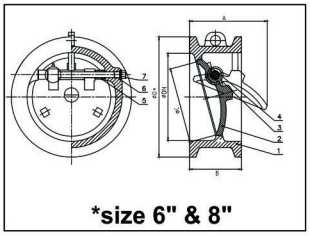

No.	Description	Material
1	Body + Seat	ASTM A351 CF8M+316
2	Disc	ASTM A351 CF8M
3	Hinge Pin	ASTM A276 SS316
4	Bushing	ASTM A276 SS316
5	Spacer	ASTM A276 SS316
6	Gasket	ASTM A276 SS316
7	Plug	ASTM A276 SS316

Specification is subject to change without prior notice